PARTS CATALOG

Punch Unit-U1/V1/W1/X1

Canon

Feb 3 2006

PREFACE

This Parts Catalog contains listings of parts used

Diagrams are provided with the listings to aid the service technician in identifying clearly, the item to be orderd.
Whenever ordering parts, consult this Parts Catalog for all of the information pertaining to each item. Be sure to include, in the Parts Request, the full item description, the item part number, and the quantity.

COPYRIGHT (C) 1999 CANON INC.

Use of this manual should be strictly supervised to avoid disclosure of confidential information.

Contents

NUMERICAL INDEX

Punch Unit-U1/V1/W1/X1 1-1

Punch Unit-U1/V1/W1/X1

Q01 ATTACHMENT PARTS 2-1
Q45 PUNCH ASSEMBLY 2-3

NUMERICAL INDEX
Punch Unit-U1/V1/W1/X1

PARTS NUMBER	FIGURE & KEY NO.	PARTS NUMBER	FIGURE & KEY NO.	PARTS NUMBER	FIGURE & KEY NO
FC6-5977-000	Q45 - 1				
FC6-6187-000	Q45 - 2				
FC6-6193-000	Q45 - 3				
FC6-6201-000	Q45 - 4				
FC6-6202-000	Q45 - 5				
FC6-6203-000	Q45 - 6				
FC6-6204-000	Q45 - 7				
FC6-6209-000	Q01 - 5				
FC6-6312-000	Q45 - 8				
FC6-6313-000	Q45 - 16				
FC6-6324-000	Q45 - 11				
FC6-6325-000	Q45 - 12				
FC6-6326-000	Q45 - 13				
FC6-6328-000	Q45 - 15				
FC6-6329-000	Q01 - 9				
FC6-6337-000	Q01 - 7				
FK2-0149-000	Q01 - 12				
FK2-0149-000	Q45 - 20				
FL2-3563-000	Q01 - 4				
FL2-3615-000	Q01 - 8				
FL2-4988-000	Q45 - 21				
FM2-5770-000	Q45 - 17				
FM2-5771-000	Q45 - 17				
FM2-5772-000	Q01 - 10				
FM2-6391-000	Q45 -				
FM2-6392-000	Q45 -				
FM2-6393-000	Q45 -				
FM2-6394-000	Q45 -				
FM2-6422-000	Q01 - 11				
FU5-8915-000	Q01 - 1				
FU5-8916-000	Q01 - 2				
FU5-8957-000	Q01 - 3				
FU6-2313-000	Q45 - 9				
NPN	Q01 -				
VS1-7177-007	Q45 - 18				
XA9-0732-000	Q01 - 6				
XA9-0732-000	Q45 - 10				
XA9-0780-000	Q45 - 14				
XB1-2300-607	Q45 - 501				
XB1-2400-607	Q01 - 502				
XB1-2400-607	Q45 - 502				
XB4-6401-209	Q01 - 501				
XB6-7400-407	Q45 - 503				
XD3-2200-082	Q45 - 504				
XD9-0134-000	Q45 - 19				

Punch Unit-U1/V1/W1/X1

Punch Unit-U1

F26-7104-000

Punch Unit-V1

F26-7114-000

Punch Unit-W1

F26-7124-000

Punch Unit-X1

F26-7134-000

Contents

Q01 ATTACHMENT PARTS 2-1
Q45 PUNCH ASSEMBLY 2-3

FIGURE Q01
ATTACHMENT PARTS

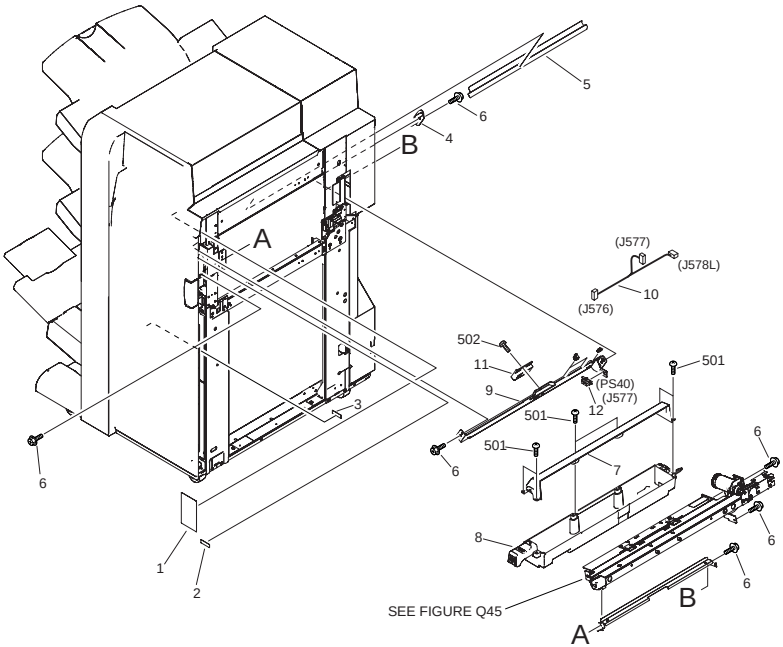

FIGURE & KEY NO.	PARTS NUMBER	RANK	Q'TY	DESCRIPTION	SERIAL NUMBER/ REMARKS	SVC
Fig.Q01	NPN		RF	ATTACHMENT PARTS		
1	FU5-8915-000		1	LABEL		
2	FU5-8916-000		1	LABEL		
3	FU5-8957-000		1	LABEL, PUNCH MAP		
4	FL2-3563-000		1	SUPPORT, PUNCH		
5	FC6-6209-000		1	SHEET, LOOP		
6	XA9-0732-000		6	SCREW,RS,M4		
7	FC6-6337-000		1	BOX, PUNCH DUST, UPPER		
8	FL2-3615-000		1	BOX, DUST, LOWER		
9	FC6-6329-000		1	FRAME, DUST BOX SENSOR		
10	FM2-5772-000		1	CABLE, PUNCH DUST	J576,577,578L	
11	FM2-6422-000		1	PAPER DUST SENSOR UNIT		
12	FK2-0149-000		1	PHOTO-INTERRUPTER, TLP1253(C6)	PS40 J577	
501	XB4-6401-209		6	SCREW,TAPPING PAN,HEAD M4X12		
502	XB1-2400-607		1	SCREW, CROSS-RECESS, FCH		

FIGURE Q45
PUNCH ASSEMBLY

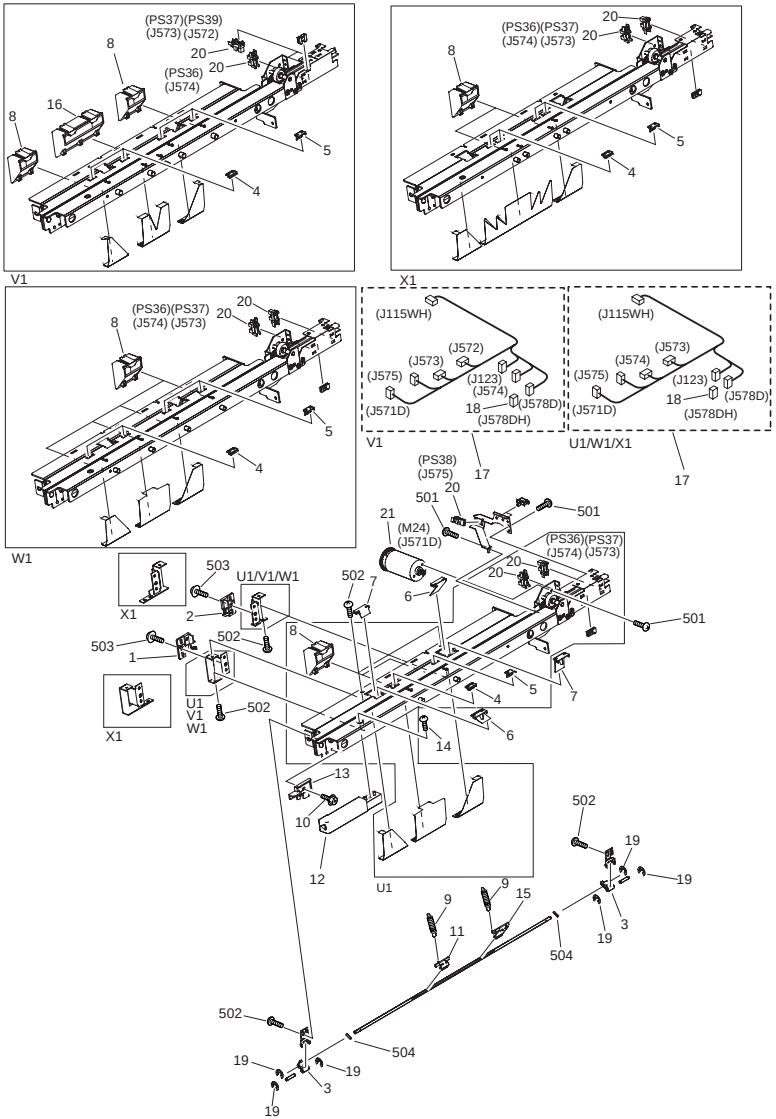

FIGURE & KEY NO.	PARTS NUMBER	RANK	Q'TY	DESCRIPTION	SERIAL NUMBER/ REMARKS	SVC
Fig.Q45	FM2-6391-000		1	2 HOLD PUNCH ASSEMBLY	U1	
Fig.Q45	FM2-6392-000		1	5 HOLD PUNCH ASSEMBLY	V1	
Fig.Q45	FM2-6393-000		1	4 HOLD PUNCH ASSEMBLY	W1 FRENCH	
Fig.Q45	FM2-6394-000		1	4 HOLD PUNCH ASSEMBLY	X1 SWEDISH	
1	FC6-5977-000		1	PLATE, STOPPER, FRONT		
2	FC6-6187-000		1	PLATE, STOPPER, REAR		
3	FC6-6193-000		2	ARM, BACK END STOPPER TURN		
4	FC6-6201-000		2	GUIDE, PUNCH HOLE, FRONT		
5	FC6-6202-000		2	GUIDE, PUNCH HOLE, REAR		
6	FC6-6203-000		2	GUIDE, STOPPER HOLE, FRONT		
7	FC6-6204-000		2	GUIDE, STOPPER HOLE, REAR		
8	FC6-6312-000		4	DUCT, WASTE, 1		
9	FU6-2313-000		2	SPRING, TENSION		
10	XA9-0732-000		1	SCREW,RS,M4		
11	FC6-6324-000		1	STOPPER, BACK END, FRONT		
12	FC6-6325-000		1	LEVER, RELEASE		
13	FC6-6326-000		1	SLIDER, PUNCH FRAME		
14	XA9-0780-000		1	SCREW, M4X12		
15	FC6-6328-000		1	STOPPER, BACK END, REAR		
16	FC6-6313-000		1	DUCT, WASTE, 2	V1 ONLY	
17	FM2-5771-000		1	CABLE, PUNCH, 2/4	U1/W1/X1 J123,573-575 J571D,578D,115WH	
17	FM2-5770-000		1	CABLE, PUNCH, 2/3	V1 J123,572-575 571D,578D,115WH	
18	VS1-7177-007		1	CONNECTOR, 7P, FEMALE, BK	J585DH	
19	XD9-0134-000		6	RING, E		
20	FK2-0149-000		4	PHOTO-INTERRUPTER, TLP1253(C6)	PS36-39 J572-575	
21	FL2-4988-000		1	MOTOR, DC	M24 J571D	
501	XB1-2300-607		4	SCREW, BH3X6(S)		
502	XB1-2400-607		6	SCREW, CROSS-RECESS, FCH		
503	XB6-7400-407		2	SCREW,TP,M4X4		
504	XD3-2200-082		2	PIN, PARALLEL		

Prepared by

OIP HFE Promotion Center

CANON INC.

Canon